Indian Valley Industries, Inc.

Technical Data Sheet

IVI Debris Boom II
with 22 oz. PVC Coated Fabric

IVI Debris Boom II is designed to contain debris in outer harbor and open water containment applications where higher currents prevail. Featuring dual load lines and universal aluminum connector.

Standard Features

Curtain and Flotation Fabric: Non-permeable, 22 oz. yellow PVC coated polyester

Section Length: 100 LF

Depth: 2'

Flotation:
8" x 8" EPS foam blocks providing 26.7 lbs/lf buoyancy

Ballast: 5/16" galvanized steel coil

Dual 5/16" 7x19 vinyl coated galvanized steel top load cable 9800# break strength with galvanized steel safety snap top connection

Universal aluminum connector

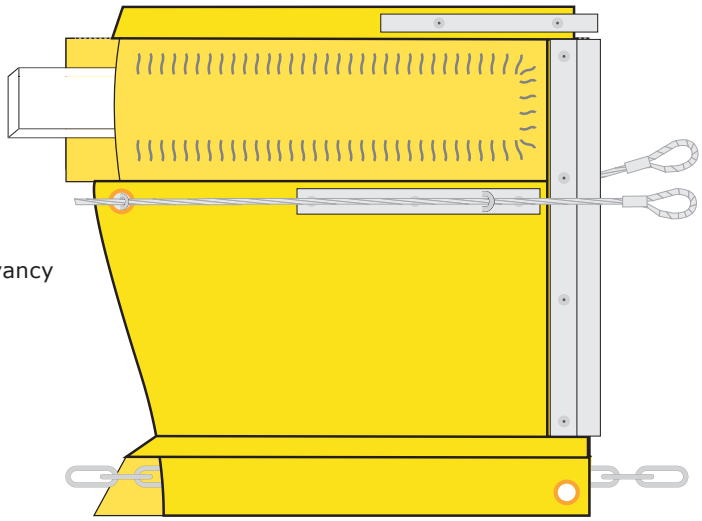

The IVI Debris Boom II fabric meets or exceeds the following specifications:

Properties	Test Method	Typical Value
Material Weight	FS 5040 / ASTM D-3776	22 oz sq yd
Yarn		Polyester
Count		16 x 16
Denier		1500
Grab Tensile	FS 5100 / ASTM D-5034	400 x 400 lbs/in
Tongue Tear	FS 5134 / ASTM D-2261	132 x 143 lbs
Adhesion	FS 5970 / ASTM D-751	28 lbs/ 2"
Hydrostatic Resistance	ASTM D-751	881 lbs sq in
Mullen Burst	ASTM D-3786	924 lbs sq in
Abrasion	FS 5306 / ASTM D-3884	Start -250, Complete 400 cycles
Cold Crack	FS 5874 / ASTM D-2136	-40F
High Temperature		176F Continuous, 200F Intermittent
Treatments		Anti-Mildew & UV Pigments
Finish		Matte

The information presented herein, while not guaranteed, is to the best of our knowledge true and accurate. Except when agreed to in writing for specific conditions of use, no warranty or guarantee expressed or implied is made regarding the performance of any product, since the manner of use and handling are beyond our control. Nothing contained herein is to be construed as permission or as a recommendation to infringe any patent.

P.O. Box 810 Johnson City, NY 13790
Phone: (607) 729-5111 (800) 659-5111 Fax: (607) 729-5158
www.iviindustries.com