Catch Basin Sediment Capture Device
Installation & Maintenance Guidelines

To install Siltsack in the catch basin, remove the grate and place the sack in the opening. Hold out approximately six inches of the sack outside the frame. This is the area of the lifting straps. Replace the grate to hold the sack in place.

When the restraint cord is no longer visible, Siltsack is full and should be emptied.

To remove Siltsack, take two pieces of 1" diameter rebar and place through the lifting loops on each side of the sack to facilitate the lifting of Siltsack.

To empty Siltsack, place it where the contents will be collected. Place the rebar through the lift straps (connected to the bottom of the sack) and lift. This will turn Siltsack inside out and empty the contents. Clean out and rinse. Return Siltsack to its original shape and place back in the basin.

Siltsack is reusable. Once the construction cycle is complete, remove Siltsack from the basin and clean. Siltsack should be stored out of the sunlight until needed on another project.

Typical Siltsack Construction

Type A

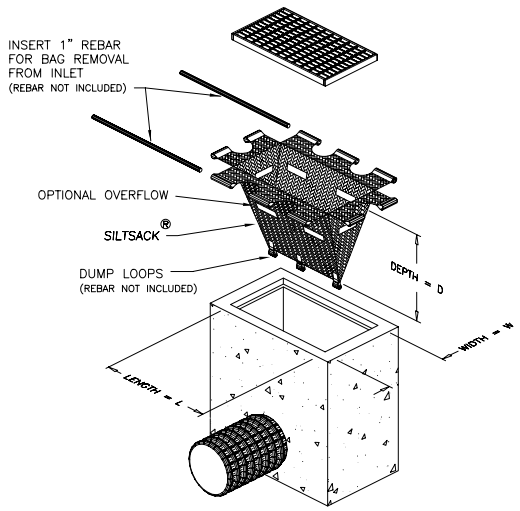

Type B

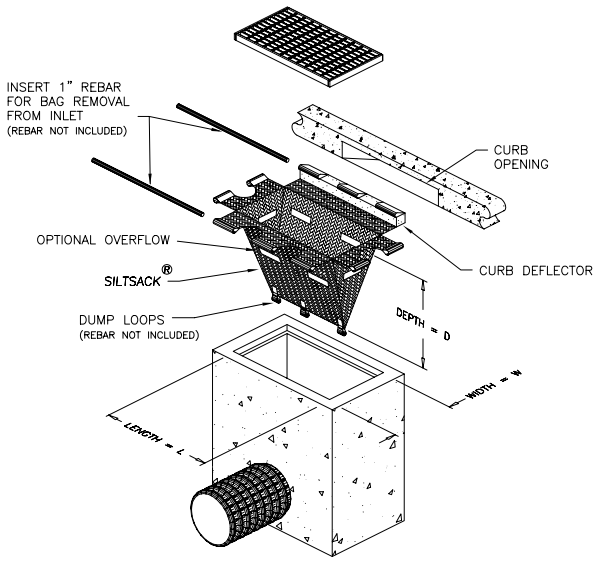

Indian Valley Industries, Inc.
P.O. Box 810 Johnson City, NY 13790
Phone: (607) 729-5111 (800) 659-5111 Fax: (607) 729-5158
www.iviindustries.com

IVI-BA-4499-0507